SITE OPTIONS · FEASIBILITY

What can we build here?

Lot 7, Example Avenue · 2,400 m² · Mixed use (example district: FAR 3.0, height 22 m). Three ways to use the lot, with suites, parking and floor area for each, for the architect to choose and mark up.

A

BAR

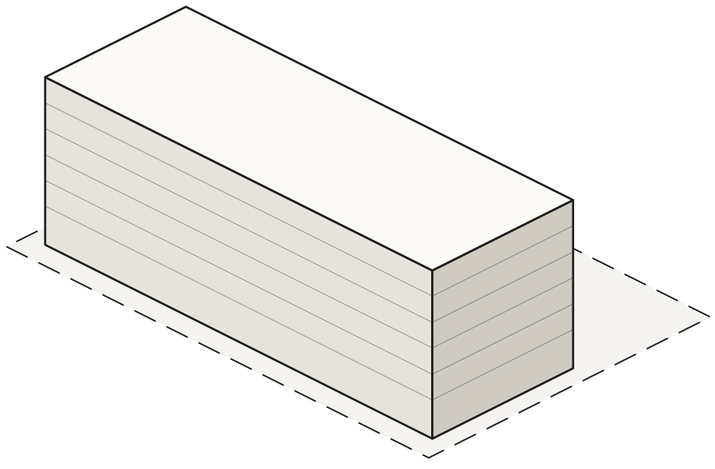

88 SUITES (EST.) · 6 STOREYS · 62 STALLS (EST.)

B

L + COURTYARD

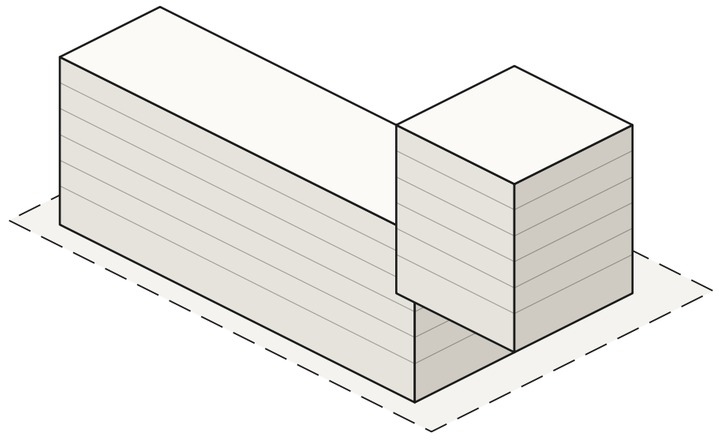

80 SUITES (EST.) · 6 STOREYS · 56 STALLS (EST.)

C

TWO BLOCKS

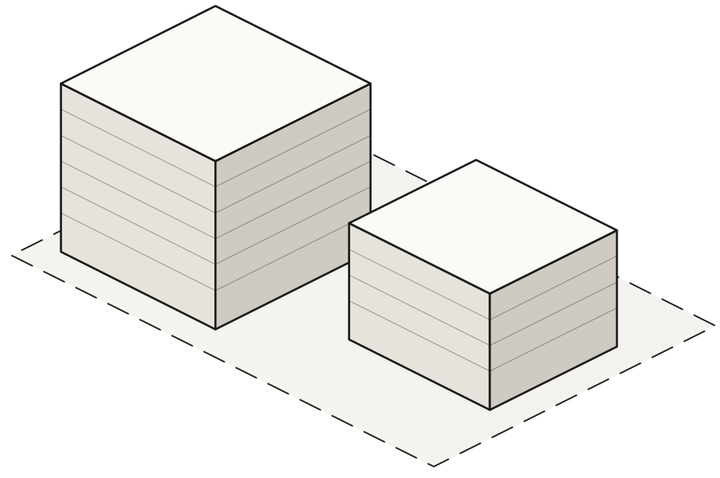

58 SUITES (EST.) · 6 + 4 STOREYS · 41 STALLS (EST.)

Drafted by an Alpha Seed agent in one afternoon from the address and the (example) zoning. Numbers are estimates for a go / no-go conversation, not a design. The architect checks the zoning reading, picks an option and marks what to change.

Sample document. The firm, client, lot and district rules are fictional. On a real project the agent cites the parcel's actual land use district, bylaw sections and Local Area Plan policies for every number it uses.

The answer in one page

The lot supports a 6-storey mixed-use building of **58 to 88 suites**, inside the example limits of FAR 3.0 and 22 m. The options trade suite count against courtyard, light and massing on the lane.

OPTION	FOOTPRINT M²	COVERAGE	STOREYS	GFA M²	FAR	SUITES	STALLS
Option A · Bar	1,100	46 %	6	6,600	2.75	**88**	62
Option B · L + Courtyard	998	42 %	6	5,988	2.49	**80**	56
Option C · Two Blocks	844	35 %	6 + 4	4,344	1.81	**58**	41

Estimates: 75 m² gross floor area per suite (incl. corridors and cores), 0.7 stalls per suite, Level 1 at 4.5 m and upper floors at 3.0 m.

For discussion: Option B, L + courtyard

- 80 suites at FAR 2.49 leaves room under the 3.0 limit for retail or a larger Level 1.
- The courtyard gives every north-facing suite a garden view and keeps the lane side lower in mass than Option A.
- One parkade level of about 2,100 m² should hold the 56 estimated stalls; to be confirmed by a layout.

DECISIONS FOR THE ARCHITECT

- Which option goes forward, or a mix of two.
- Target suite mix (the estimate assumes 45 % one-bed, 45 % two-bed, 10 % three-bed).
- Retail at grade on Example Avenue, or residential to the ground.
- Any stepback on the avenue at the top floor.

WHAT THE AGENT DID

- Read the lot's (example) district rules: uses, FAR, height, setbacks, parking and amenity rates.
- Built the buildable envelope: 1,785.6 m² footprint, max. 7,200 m² GFA, 22 m ≈ 6 storeys.
- Drafted three massings, then estimated floor area, suites and parking for each.

MUST BE VERIFIED BEFORE ANYONE RELIES ON IT

- The parcel's actual district and any Direct Control or exemption bylaw.
- Local Area Plan policies (heights, stepbacks, frontage).
- Parking and bicycle minimums for this location; servicing capacity; geotechnical and environmental conditions; the survey.

FIG. 1 · LOT 7 AND THE BUILDABLE ENVELOPE



Lot 60.0 × 40.0 m = 2,400.0 m². Buildable footprint after setbacks: 1,785.6 m² (57.6 × 31.0 m).

Zoning (example)

RULE	VALUE USED
Land use district	MIXED USE (EXAMPLE DISTRICT)
Maximum floor area ratio	3.0 → 7,200 m² GFA
Maximum building height	22.0 m → 6 storeys at 4.5 + 5 × 3.0 = 19.5 m
Front setback (Example Avenue)	3.0 m
Rear setback (lane)	6.0 m
Side setbacks	1.2 m
Balcony projection into setbacks	1.5 m
Motor vehicle parking	0.5 / suite residents + 0.1 / suite visitors
Bicycle parking	Class 1: 0.5 / suite · Class 2: 0.1 / suite + 1 / 250 m² commercial
Amenity space	Common 2.5 m² / suite · private 4.0 m² / suite

These are example values that stand in for a real parcel. The film calls them "ZONING (EXAMPLE)". With a real address, the agent pulls the land use district and the bylaw sections that apply and cites each one, and flags anything it cannot confirm (Direct Control districts, exemptions after the 2026 rezoning repeal, plan policies).

A Bar

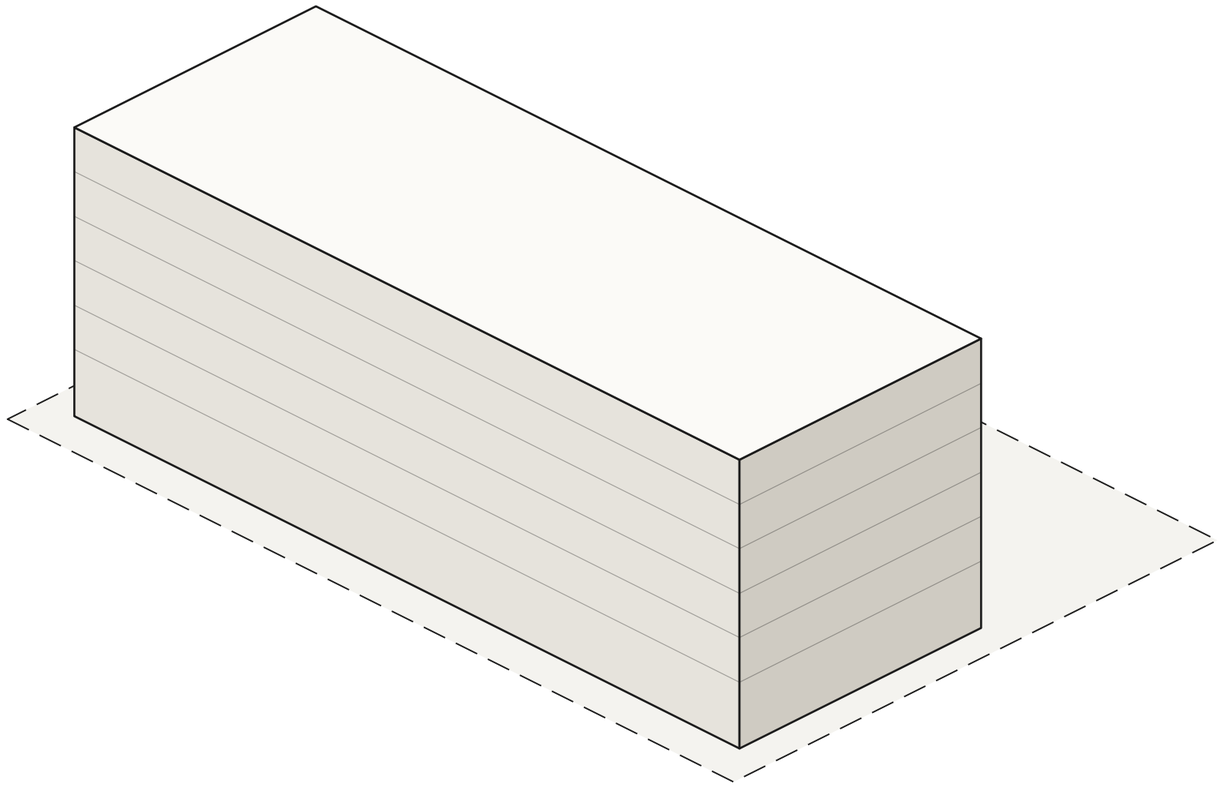

Massing on Lot 7 viewed from the south-east. Ground floor 4.5 m, upper floors 3.0 m.

88	6,600	2.75	62
suites (est.)	m^2 GFA	FAR (max 3.0)	stalls (est.)

PLAN

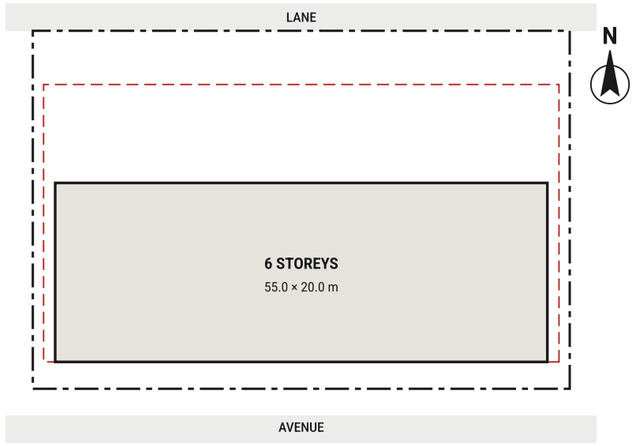

Works

- Most suites (88) and simplest structure: one double-loaded bar.
- Shortest corridors; lowest cost per suite.

Watch

- Long, uniform wall on the avenue and on the lane.
- No courtyard; north suites face the lane.
- Heaviest shadow on the lane-side houses.

B L + Courtyard

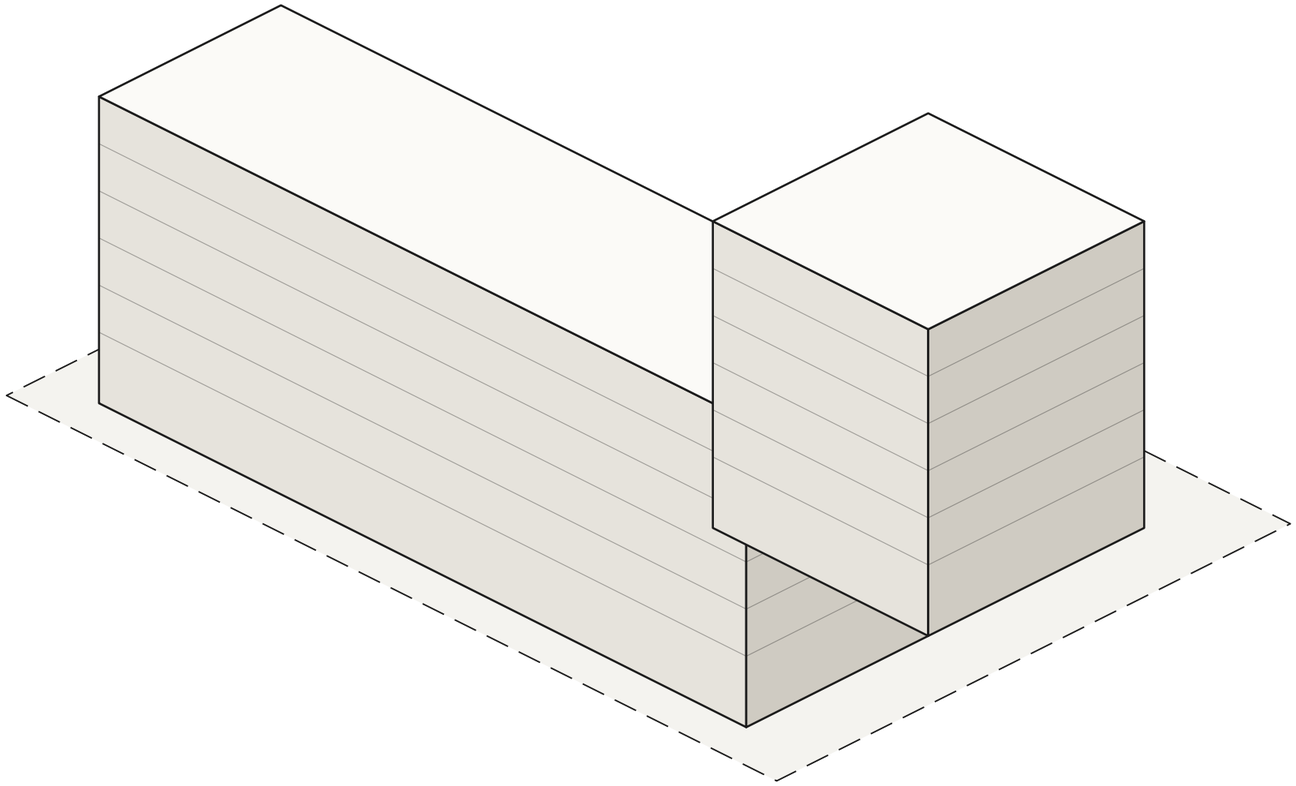

Massing on Lot 7 viewed from the south-east. Ground floor 4.5 m, upper floors 3.0 m.

80	5,988	2.49	56
suites (est.)	m^2 GFA	FAR (max 3.0)	stalls (est.)

PLAN

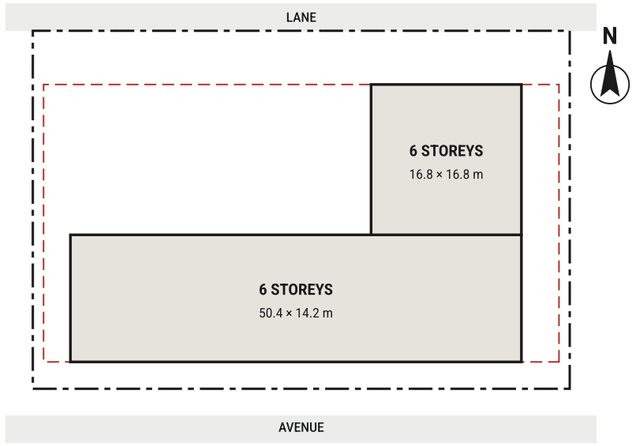

Works

- Courtyard: garden views for north suites, outdoor amenity on the parkade roof.
- Wing on the east keeps the west side lower and open.
- 80 suites at FAR 2.49: headroom for retail at grade.

Watch

- Inside corner at the core: needs care with light and privacy.
- Exit stair needed at the end of the wing.

C Two Blocks

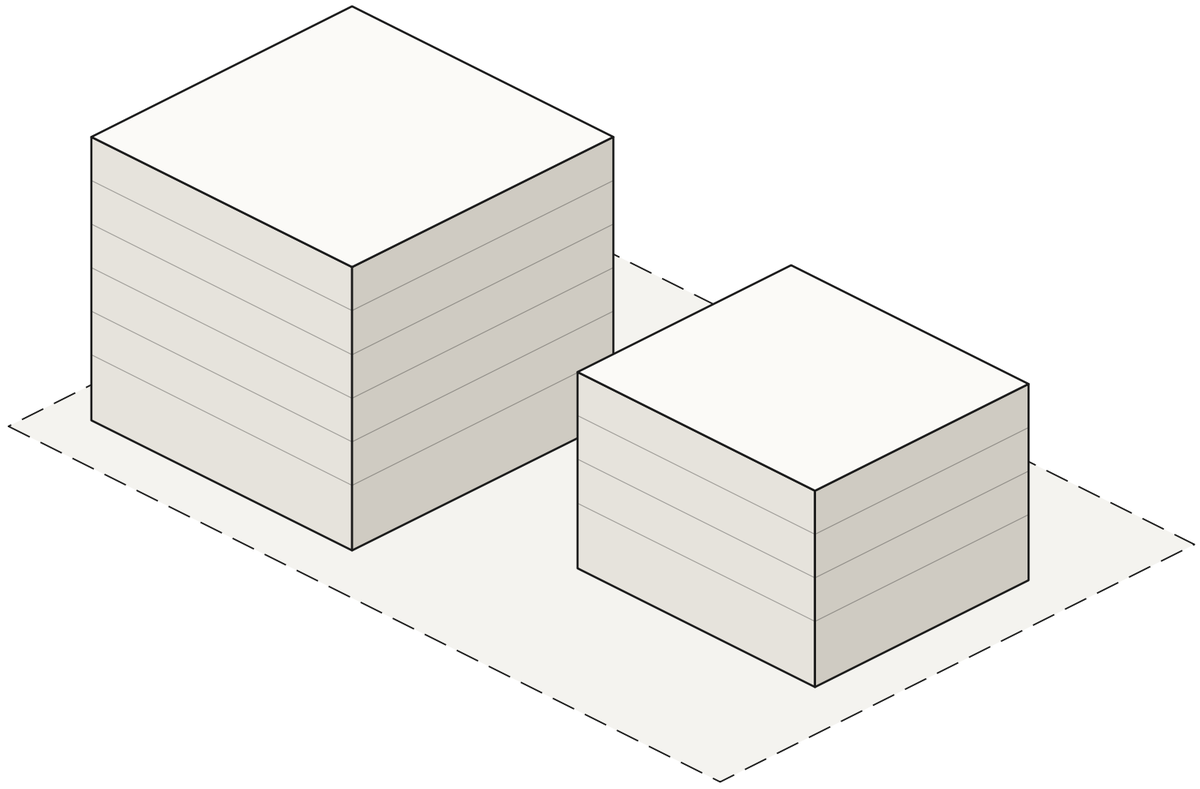

Massing on Lot 7 viewed from the south-east. Ground floor 4.5 m, upper floors 3.0 m.

58	4,344	1.81	41
suites (est.)	m² GFA	FAR (max 3.0)	stalls (est.)

PLAN

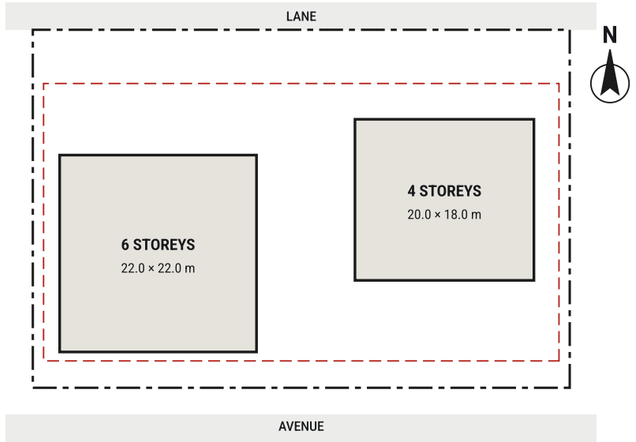

Works

- Two smaller buildings: more corners, more light, varied massing.
- Lowest impact on the lane (4-storey block).

Watch

- Fewest suites (58) and two cores, stairs and elevators: highest cost per suite.
- Parkade spans under both buildings.

SUITES (EST.)

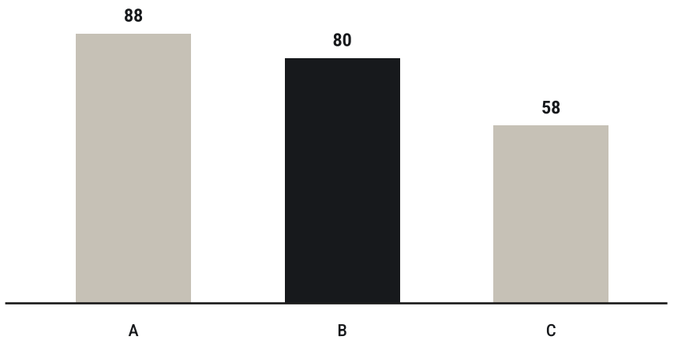

PARKING STALLS (EST.)

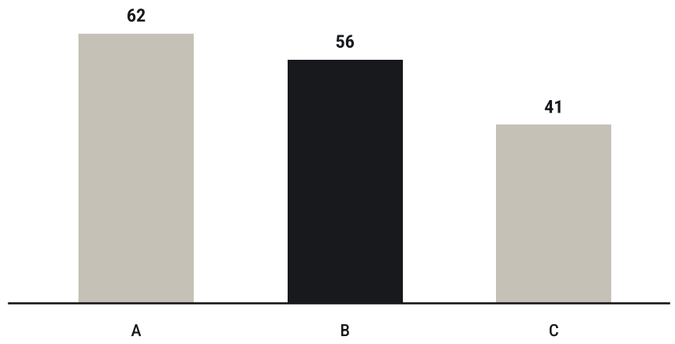

GROSS FLOOR AREA, M²

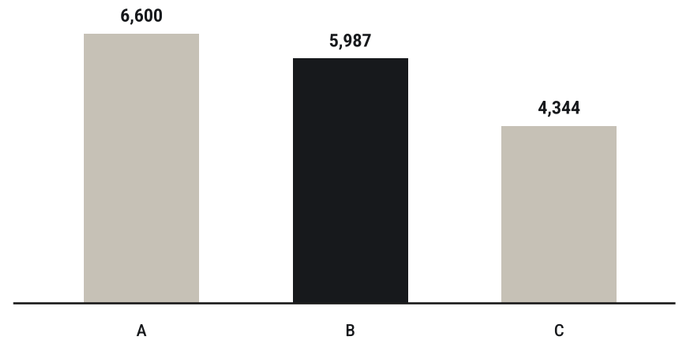

Qualitative comparison

CRITERION (●●● = BEST)	A · BAR	B · L + COURTYARD	C · TWO BLOCKS
Suites	●●●	●●○	●○○
Courtyard / outdoor amenity	○○○	●●●	●●○
Daylight to north suites	●○○	●●○	●●●
Mass and shadow on the lane	●○○	●●○	●●●
Structure and cores (cost per suite)	●●●	●●○	●○○
Room for retail at grade	●●○	●●●	●○○

Assumptions

- 75 m² of gross floor area per suite, including the suite's share of corridors, cores and walls.
- 0.7 stalls per suite on one parkade level of about 2,100 m²; ramp from the lane.
- Level 1 floor-to-floor 4.5 m (retail-ready); Levels 2–6 at 3.0 m.
- No height or FAR bonus; no Direct Control or exemption bylaw on the parcel (to verify).

What happens next

The architect picks an option and marks it up. The agent redraws it as a schematic set with real suite layouts, counts the suites and stalls from the drawings and checks the package against the City's requirement list.

In this sample: the architect picked Option B and asked for a stepped-back Level 6 and more two-bedroom suites. The redrawn set has 68 suites, 43 stalls and 6,557 m² GFA (see the drawing set, A-000).